Distributed Generation (DG)

Pembankit Terdistribusi

Distributed Generation (DG)

- Production of electricity near the consumption place
- Resources are renewable energi and cogeneration (simultaneous production of heat and electricity)
- Renewable energy is energy from natural resourches (wind, sunlight, tides, wave, geothermal heat and biomass).

DG Thecnologies

- Micro Hydro
- Wind Turbin
- Photovoltaic Panel

Micro Hydro

- use the energy in flowing water to produce electricity or mechanical energy
- The hydraulic power P_0 (kW) and the corresponding energy E_0(kWh) over an interval time Δt(h) will be
  - $P_0 = \rho \cdot g \cdot Q \cdot H_0$ (kW)
  - $E_0 = \rho \cdot g \cdot H_0 \cdot \Delta t$ (kWh)
- Where H_0 – net head (m); Q - the discharge diverted to the power plant (m^3/s)

Micro Hydro

- The final power (P_F) delivered to the network is smaller than the available hydraulic power (P_0)
  - $P_F = \eta \cdot P_0$
- Where : η = the global efficiency

Micro Hydro

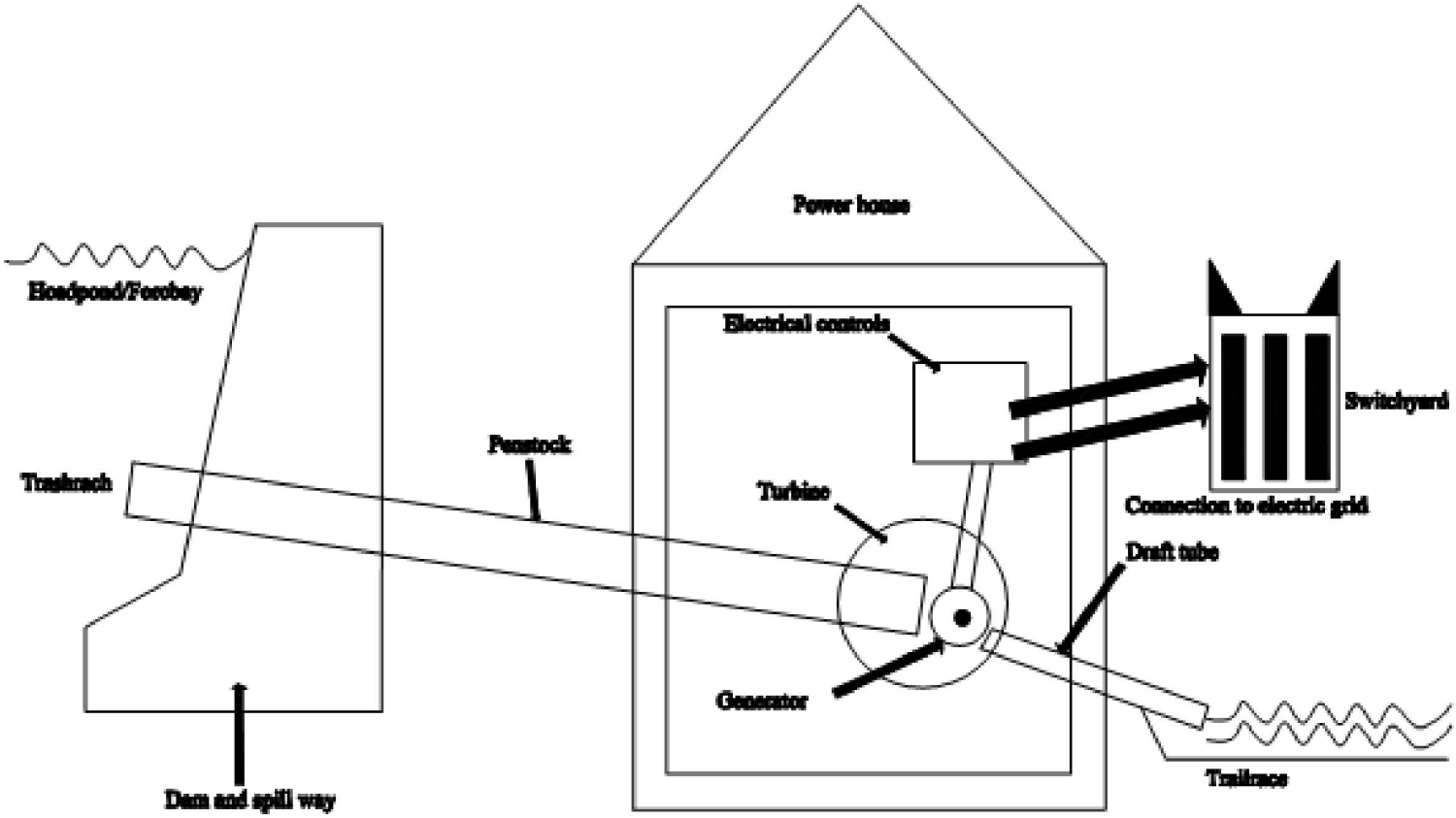
Power house
Headpond/Forebay
Electrical controls
Switchyard
Penstock
Trashrack
Turbine
Connection to electric grid
Draft tube
Generator
Tailrace
Dam and spill way

Wind Turbine

- The wind kinetic energy is transmitted to the blades, which drives a shaft coupled to an electric generator that transforms (converts) the wind power into electric energy.
- The main parts of a wind turbine are: rotor, blades, nacelle (contains all major components such as shaft, gearbox and the electric generator) and tower.

Wind Turbine

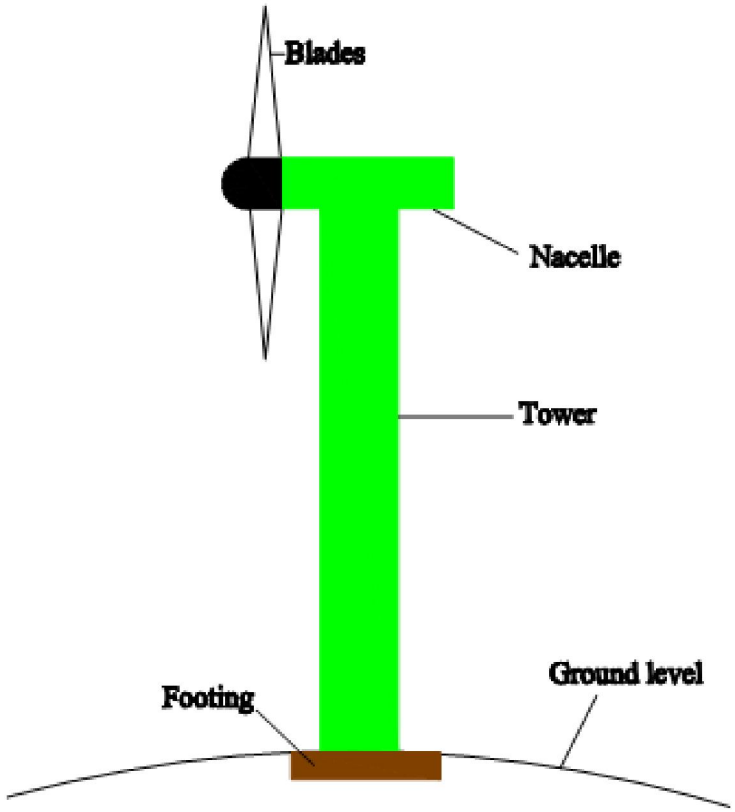

Wind Turbine

- The power that can be generated by a wind turbine are:
  - $P = 0.5 \cdot \rho \cdot A \cdot Cp \cdot w^3 \cdot \eta g \cdot \eta b$ (W)
- Where
  - ρ - air density [kg/m3];
  - A - rotor swept area, exposed to the wind (m2);
  - Cp - coefficient of performance (depending on turbine);
  - w - wind speed (m/s);
  - ηg - generator efficiency;
  - ηb - gearbox efficiency.

Photovoltaic Panel

- A photovoltaic panel transforms the light from the Sun directly into electric energy.
- The output power of photovoltaic panels can be mathematically expressed as
  - $P = \eta \cdot I \cdot S_n$ (W)
- Where :
- η - efficiency of the panel;
- I – insolation (the power produced per unit square meter of the panel);
- S_n - number of panels.

Photovoltaic Panel

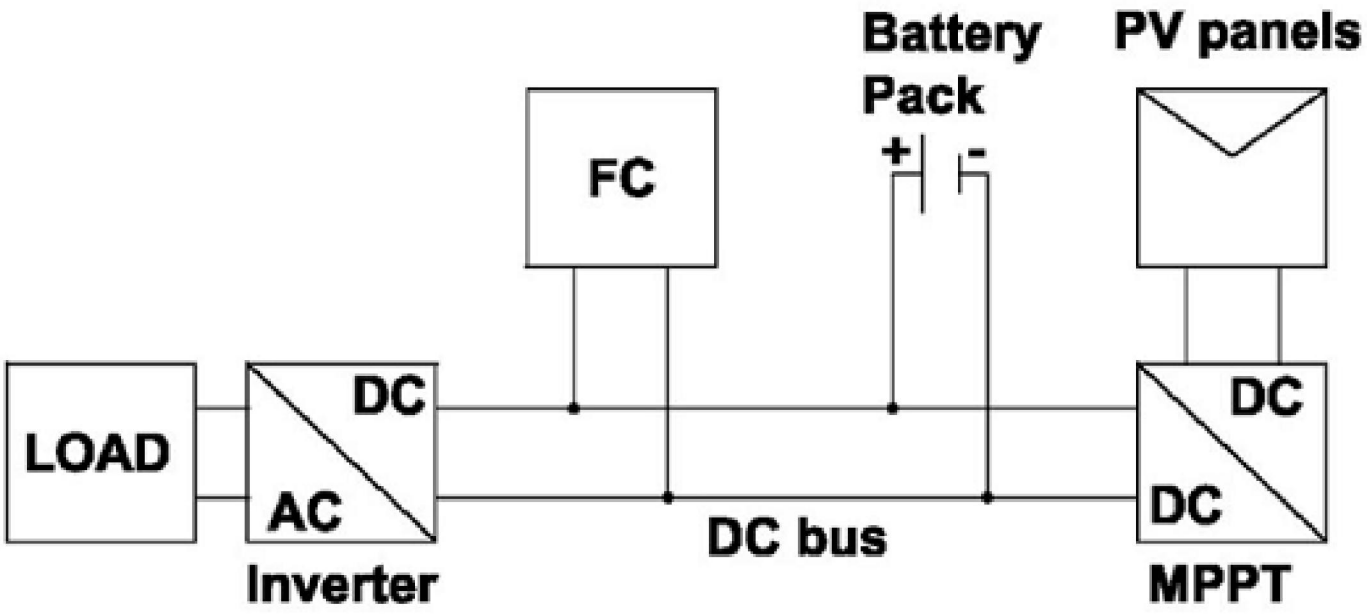

Optimization of DG

- The optimization aims to minimize the electricity production costs ensuring that the load is served reliably.
- Objectives
  - min { C (P) }
- Restriction
  - $P_i^{min} \leq P_i \leq P_i^{max}$
  - $Q_i^{min} \leq Q_i \leq Q_i^{max}$
  - $U_i^{min} \leq U_i \leq U_i^{max}$
- Where :
  - C(P)- the cost of generated power ($/MWh);
  - P- active power generated (MW);
  - Q- reactive power generated (MVAr);
  - U- rated voltage (kV)

Test System

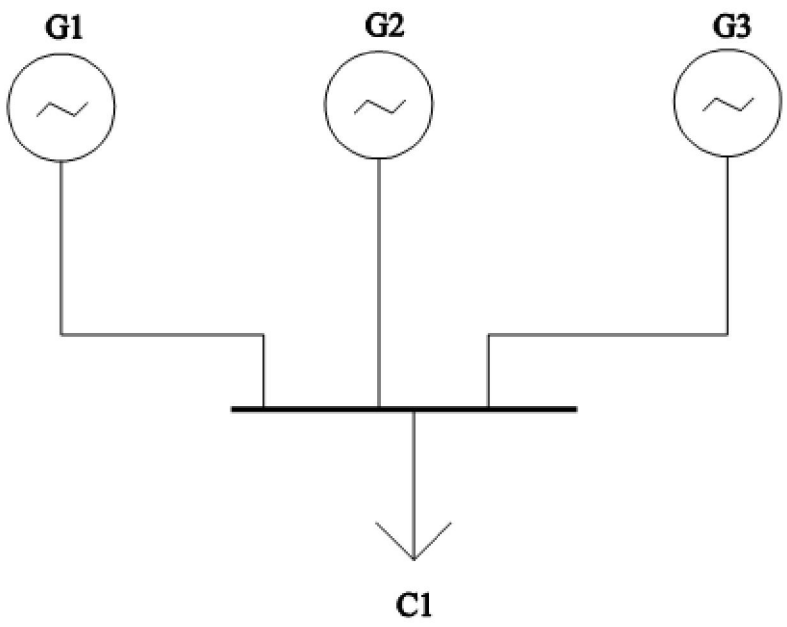

- hydroelectric (G1 having 72 MW), thermoelectric (G2 having 50 MW) and a wind turbine (G3 having 1 MW). There is also a 100 MW consumer (C1).

Typical Micro Grid Model

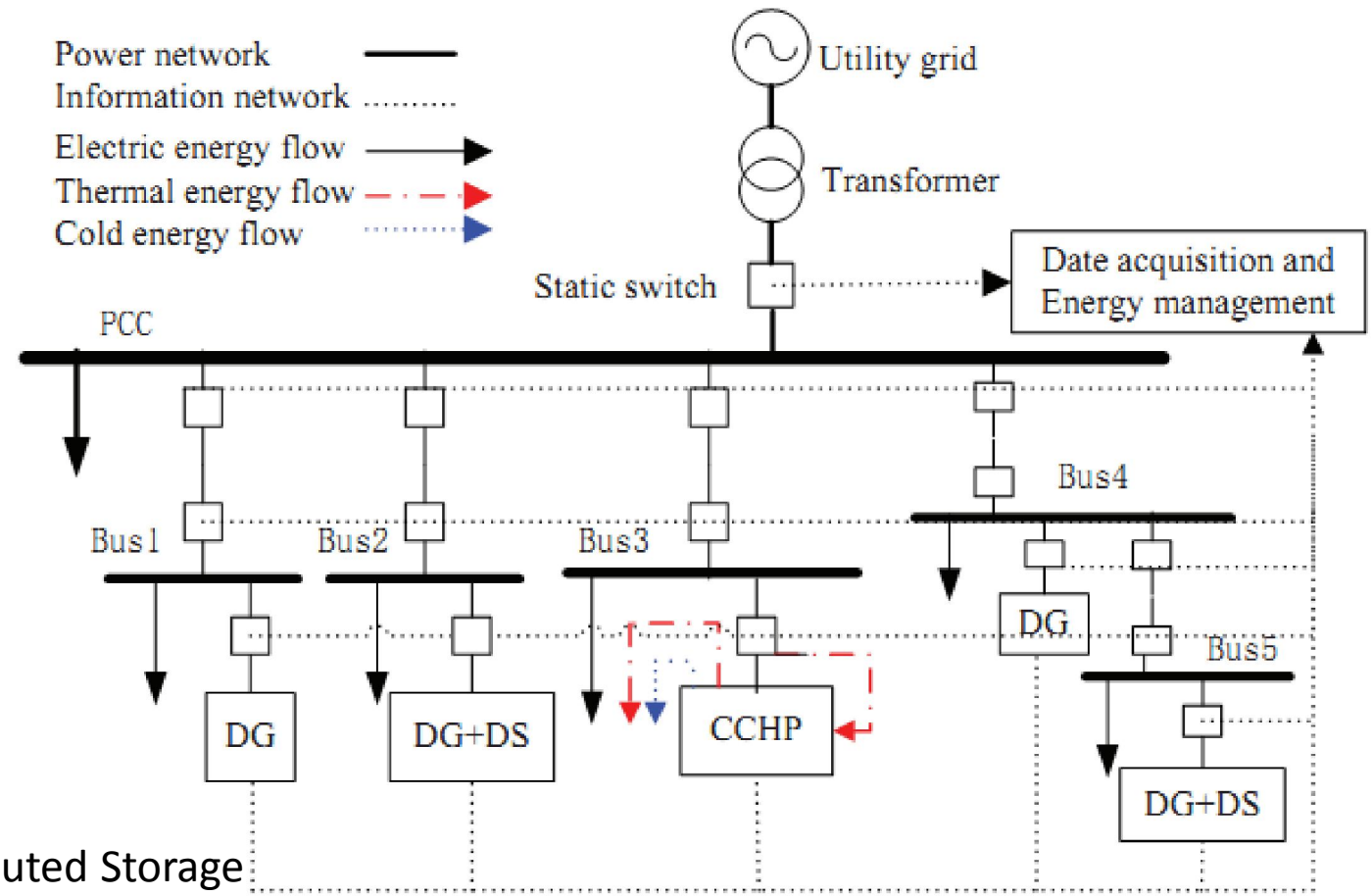

DS = Distributed Storage
DG = Distributed Generation
CCHP = Combined Cold Heat Power

Distributed Hybrid Energy System

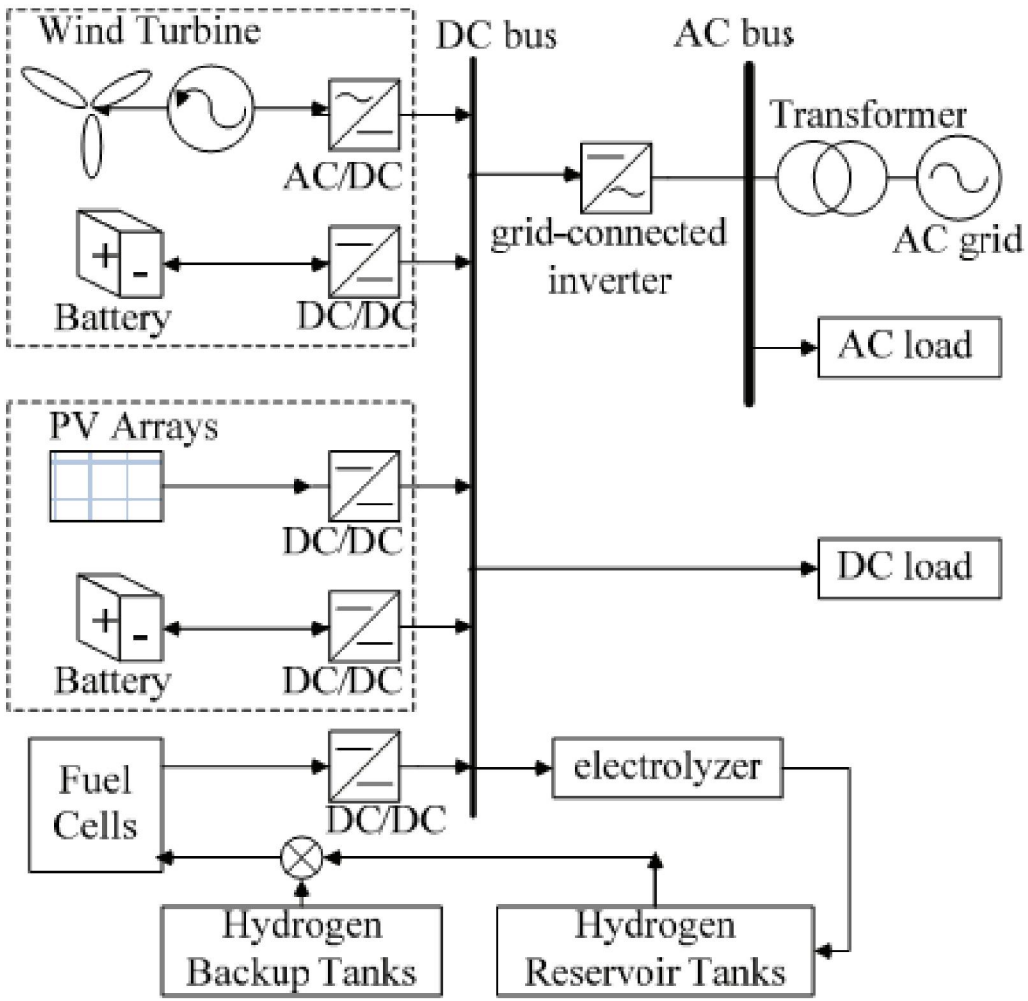

Smart Micro Grid Model

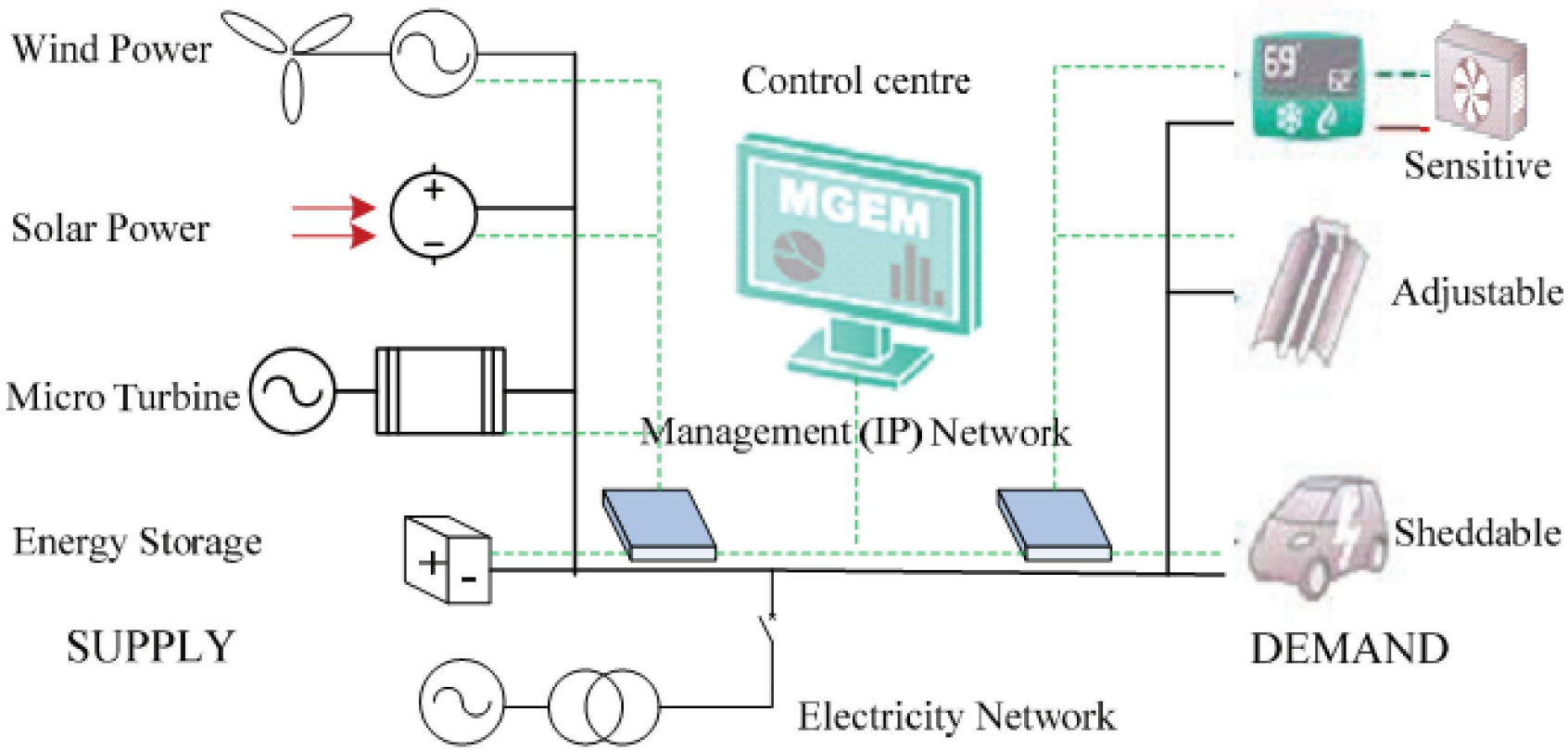

Daftar Pustaka

- Dalau, L. I, M. Abrudean, D. Bica, 2013, *DistributedGeneration Technology*, The 7th International Conference Interdisiplinarity in Engineering (INTER-ENG – 2013)
- Zuo Sun and Xun-you Zhang, 2012, *Advances on Distributed Generation Technology*, 2012 International Conference on Future Electrical Power and Energy System.