Efficient Data Management in E-Business Transactions

Nikos Karacapilidis
University of Patras, Greece

EXECUTIVE SUMMARY

This case reports on the implementation of an open information management system that integrated modern information technology approaches to address the needs of a Greek medium-scale clothing producer towards heading to e-business. The system was able to interoperate with the company's legacy ERP system and automated intra-business, business-to-business and business-to-customer processes. The overall approach was designed around open standards for data exchange and integrated as a set of off-the-shelf tools that assured a robust, scalable and fast development cycle. Particular attention was paid to the appropriate synchronization of the internal and external work and data flows, the improvement of supply chain management, the reduction of transactions costs through the appropriate process automation, the reduction of errors occurring during the traditional handling of business documents, the reduction of the company's inventory levels, and, finally, the establishment of a cooperative environment between the enterprise and its customers and suppliers.

BACKGROUND

The company that this case reports on is based in Greece and was founded in 1971 after the merging of two small-scale clothing production and wholesale enterprises (which were in turn founded in 1965 and 1969). Since 1985, the company has established a network of eight modern style shops around the country, which operate as its own retailers, under the company's name. In parallel, the company has 389 customers (as of July 2001), 270 of which are located in Greece and 119 abroad (most of them in Europe). Exporting activities of the company begun in 1971, from France. Currently, its products are sold in Europe, Arab

countries and Far East. Strategic planning of the company aims at increasing exports by 10-15% during the next five years.

The company produces menswear clothing both at its proprietary facilities in Greece and at another manufacturer in Italy. Apart from clothes, and since 1990, the company has expanded its activities by also trading menswear accessories (also produced in Italy). Its total annual sales for the years 1997-2000 are shown in Exhibit 1, while an analysis of these sales is given in Exhibit 2. The main characteristics of all company's products are their high quality, comfort, fitness and variety of designs and colors. High quality of products has always been of major importance for the company, and it is probably the main reason of its status and share in the market. To achieve that, the production line of the company is equipped with up to date mechanical gear, while all the related processes pass through quality control. Since 1996, it is an ISO 9001 company, while, since August 2000, its shares are traded in ASE (Athens Stock Exchange).

Since early in the last decade, much attention is paid to the continuous training of the 121 employees of the company, in order for them to obtain the necessary expertise. The above employees staff the company's Production, Sales and Marketing, Accounting, Information Systems and Distribution Divisions (see the organization chart shown in Exhibit 3). Much expertise has been recently obtained through the company's involvement in the CRAFT European project, which aimed at the development of an automated quality control system for end-products in a textile industry. The program had a three-year duration, its total budget was 939,880 ECU (the share of the company was 15.16%), while the project consortium comprised 5 textile manufacturers and 3 research institutes.

The company has always been considering that in order to keep its status and market share, it also has to keep an eye for developments outside its own practices and measures. Advances in information technology, shifts in consumer demand, and the increasing movements of goods across international borders (aided by the internal European market) characterize its business environment. This new reality required a fundamental reconsideration of the most effective way of delivering the right products to consumers at the right price.

Exhibit 1. Financial Figures (Total Sales)

Annual Sales (in thousands of U.S. dollars)	**1997**	**1998**	**1999**	**2000**
Sales in Greece	6, 335	6,947	7,198	7,324
Exports	476	521	529	570
Total Sales	6,811	7,468	7,727	7,894

Exhibit 2. Financial Figures (Clothes and Accessories Sales)

Annual Sales (in thousands of U.S. dollars)	**1997**	**1998**	**1999**	**2000**
Clothes	5,670	6,157	6,507	6,655
Accessories	1,141	1,311	1,220	1,239
Total Sales	6,811	7,468	7,727	7,894

Exhibit 3. The Company's Organization Chart

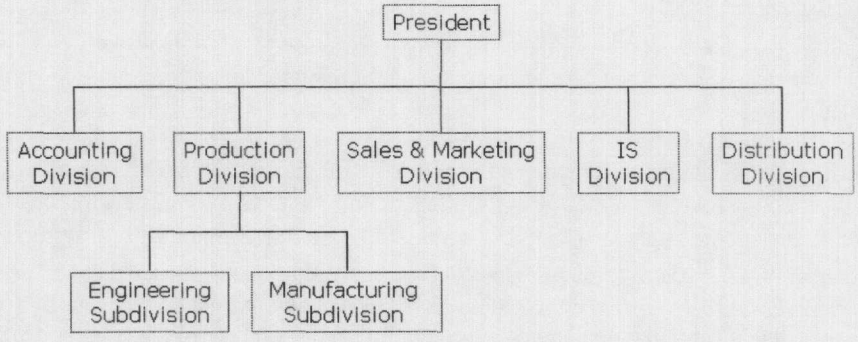

Non-standardized operational practices and the rigid separation of the traditional roles of manufacturer and retailer threatened to block the supply chain unnecessarily and failed to exploit the synergies that came from powerful new information technologies and planning tools.

Both *demand-side* and *supply-side* management receive much consideration in the company's overall culture, which is fully in line with the *Efficient Consumer Response* (ECR) movement, effectively began in Europe in the mid-nineties. This movement was characterized by the emergence of new principles of collaborative management along the supply chain. It was understood that companies could serve consumers better, faster and at a lower cost by working together with trading partners. By working together, they are able to combine capabilities on serving the consumer better, faster and at a lower cost. Admittedly, the clothing industry becomes more and more dynamic, in that competition is growing and becoming more complex, technology is rapidly developing, international and environmental issues are augmenting, and business is becoming more and more global. At the same time, consumers become increasingly sophisticated and demanding; they demand sufficient choice, high service and convenience, higher quality products and, generally speaking, more value for money.

SETTING THE STAGE

Six persons staff the company's Information Systems (IS) Division, which is managed by a well-experienced computer engineer. The other five employees have mixed tasks, including operation and maintenance of the information systems, programming, and data entry. All divisions (at the company's own facilities) use PCs connected to a main server. Since 1994, the company was running a custom-developed ERP system and an off-the-shelf bookkeeping system, which were operating in isolation. The former was not fully exploited, in that neither all of its features and abilities were activated nor all business parts were being monitored.

In September 2000, market and business changes, such as increasing competition and shortening of products life cycle, led the company to the decision that they need to heavily invest in contemporary information technologies to both keep its status and gain competitive advantages. It was clear that such technologies would efficiently aid them to communicate, collaborate, and conduct business activities such as marketing, billing, and continuous

customer service. In addition, on their way to embark on e-business, the company needed to exchange data with their trading partners, who may be using different platforms and a variety of data formats. For that, it was necessary to leverage their IT investments and integrate legacy data, residing in the existing applications.

To make their business transactions more efficient, the IS Division considered in detail two major issues: the technology that a system able to address the above changes should be based on, and the underlying business processes of the company (Froehlich et al., 1999). The system envisioned certainly had to fit the overall organizational context and be flexible enough to easily address arising opportunities. The global expansion of communication infrastructure should be also exploited, since it could provide the company with the potential of creating competitive advantages by electronically doing business with their trading partners, being their customers or suppliers. Obviously, the related transactions had to be efficiently structured and represented in the data flow and workflow of all partners involved.

To efficiently represent the information flow in an e-business-oriented enterprise system, the company had to consider whether its trading partners already use an enterprise system or even have any experience in doing any kind of business electronically. If not, applications delivering the required functionality via a standard browser over the Internet seemed to be the most appropriate solution. The justification was that such an application could always be kept up-to-date, while there would be no need for any installation at the partner's site (they would only need to establish a connection to an Internet Provider). In addition, a Web-based application could be accessible from anywhere, thus relieving the restriction of only using the user's regular desktop. Another argument was that, following such an approach, the company could maintain a closer communication with its partners, in that "all parties would become a part of each other's operations and activities." For instance, problems experienced by a customer could be immediately reported to the company, either directly or through the foreseen application's centralized database, thus avoiding unnecessary delays.

In case that one or more trading partners of the company already used an enterprise system, things were more complicated since these might run on different platforms and/or use different data formats. What needed was to think about a solution that could integrate legacy data, residing in the existing applications. The computer-to-computer transfer of business information, known as Electronic Data Interchange (EDI), was first considered. EDI is traditionally based on a collection of standard message formats and elements dictionary and has provided businesses with a way to exchange data via any electronic messaging service. However, the IS Division manager concluded that adoption of EDI implies certain tasks and limitations. First, they would have to conduct a thorough analysis to determine precisely how they are going to move their business data to and from the predefined EDI formats. At the same time, what they needed was flexibility in doctrinaire standards that do not fully meet their business needs. Moreover, the manager knew that companies should refrain from using different protocols to exchange data with their peers.

The exploitation of Internet technology and its standards was the next big issue, the argument being that "its wide and rapid adoption has reset the rules of how people interact, buy and sell, and exchange goods and services." Moreover, "contemporary ways of trading, allowing interaction between groups that could not so far economically afford to trade with each other, have been introduced." Being aware of the related technologies and standards, the IS Division manager knew that, whereas previously commercial data interchange involved

mainly the transmission of data fields from one computer to another, the new model for Web-based business (the one introduced by the advent of the Internet) is greatly dependent on human interaction for the transaction to take place. That is, the new model should be principally based on the use of interactive selection of a set of options, and on the completion of electronic forms, to specify user profiles, queries, requirements, etc. Finally, the manager knew that in order to be fully interactive, the company needed to be able to understand the business concepts represented in the interchanged data, and apply business-specific rules to the interchanged data in order to both identify what classes of data it contains and, in the sequel, trigger the appropriate actions.

CASE DESCRIPTION

Analysis and Design Issues

Due to the complexity of the issues, the new system had to address and efficiently solve, much attention was paid to the system's early SDLC (System Development Life Cycle) phases, that is *analysis* and *design*. Analysis was divided into a *requirements determination* and a *requirements specification* sub-phases. During the former, statements of system services and constraints were gathered from all parties involved, namely, all managers of the company's divisions (and subdivisions), representatives of the company's retailers and suppliers (having diverse IT background or previous experience in using an enterprise system), all staff of the IS Division, and foreseen system's users across the company's divisions. Collection of statements was performed through a mix of (both structured and unstructured) interviews and questionnaires, as well as through a careful study of the company's related documents and forms to clearly identify data and work flows. Statements were also classified as concerning an individual user or the whole user community.

Generally speaking, the statements gathered contained the business rules that should be "obeyed" at all times, computations that the system has to carry out, the desired users' views and restrictions on the system's behaviour or development. Having collected the above, a *rapid prototype* was constructed (in HTML format); this significantly helped the development team to clarify some difficult (vague, contradictory, or overlapping) requirements and avoid misunderstandings early in the development of the project. It should be noted here that most parts of the rapid prototype were reused later, in the implementation phase, since the system was highly web-based.

Rational's Rose CASE tool was extensively used during the requirements specification sub-phase, thus requirements were modelled in UML (Unified Modeling Language). Class diagrams and use case diagrams received much concern in this phase. Moreover, (semi-formal) specifications were drawn concerning the system's performance, usability, maintainability and security. Having concluded, the analysis phase, particular emphasis had been given to the following major issues:

- The system foreseen should efficiently support communication with companies that have their own legacy, EDI-based, enterprise systems. Moreover, all types of interaction with such systems should not affect the traditional working methods of the related companies;
- It should easily support communication with companies (being their retailers or suppliers) that have not an IT background or previous experience in using an enterprise system. For this category of companies, a PC and a connection to the Internet should

be sufficient to make business. In addition, such transactions should be based on the use of interactive selection of a set of options and on the completion of user-friendly electronic forms;

- It should provide the appropriate schemas and modules to support business-to-business interaction. Moreover, these should be able to get seamlessly integrated with the existing ERP system to efficiently initiate a series of related actions; and
- It should be based on an open architecture that can be easily extended to address alternative data formats and structures. To this direction, open and widely adopted standards should be preferred.

The design phase consisted of an *architectural design* and a *detailed design* sub-phases. During the former, the development team performed a description of the system in terms of its modules, while decisions about the strategies to be followed regarding client, server and middleware issues were taken. It was decided that the proposed framework should rely on two servers using the Microsoft's Windows 2000 Advanced Server operating system. One of them should stand for the system's front-end (Web server) running Microsoft's Commerce Server 2000 and BizTalk Server 2000 applications, while the other for the system's back-end (database) running SQL Server 2000 (the three-tier architecture of the proposed system is illustrated in Exhibit 4). In the sequel, detailed algorithms and data structures for each of the system's modules were developed (detailed design sub-phase). Certainly, some of these algorithms and structures had to be tailored or adapted to all constraints imposed by the previously decided implementation platform. In any case, database design for this platform was not a cumbersome task; logical mappings could be easily created from the previously specified data combination rules. Moreover, user interface design basically concerned the fine-tuning of some parts of the previously developed rapid prototype.

Implementation Issues

XML (eXtensible Markup Language), developed by the World Wide Web Consortium (W3C, see www.w3c.org), can efficiently aid companies embarking on e-business, in that it

Exhibit 4. The Architecture of the Proposed System

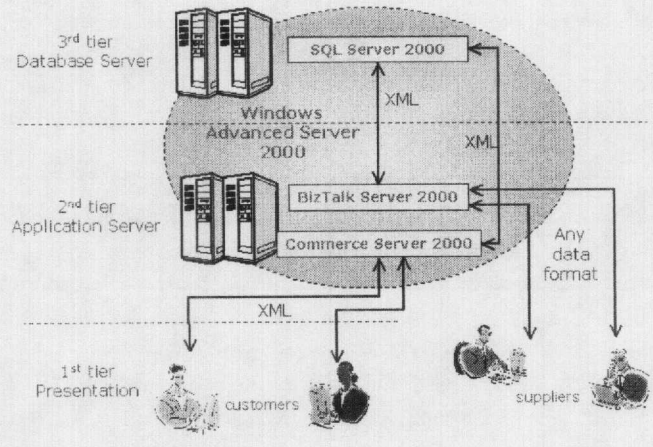

provides the appropriate data format for the related applications (Glushko et al., 1999). More specifically, XML may convey both the contents and structure of a business document, and it has rapidly imposed itself as a popular format for representing business transactions on the Web. At the same time, it is fully flexible, in that it allows a company to set up the document structure that best fulfills its business needs. The structure of an XML document can be formally described in a Document Type Definition (DTD) or an XML schema, whereas appropriate software tools can validate an XML document against a DTD or a schema definition. In addition, the IS Division's manager was aware that a series of industrial standards and tools have been already developed around the XML syntax.

Having seriously considered the above, it was decided that the development of the open e-business information management system for the company's needs had to be highly based on the combination of EDI and XML technologies (Webber, 1998). Following such an approach, the overall framework could efficiently support interaction and cooperation between various types of companies (partners), while the required functionality is delivered over the Internet. Data combination and interoperability issues had to be properly solved at this point. The system implemented can efficiently support communication with companies that have their own legacy, EDI-based, enterprise systems (Karacapilidis, 2001). Moreover, all types of interaction with such systems do not affect the traditional working methods of the companies involved.

Another system's feature is that it can easily support communication with partners that do not have an IT background or previous experience in using an enterprise system. In addition, the company's approach was based on the use of interactive selection of a set of options and on the completion of user-friendly electronic forms. It also provided the appropriate XML schemas and modules to support business-to-business interaction. These can be exploited and seamlessly integrated with the enterprise system of a company to initiate a series of related actions (companies can easily integrate the proposed framework with their own applications). Moreover, the overall framework was based on an "open" architecture that can be easily extended to address alternative data formats and structures. This is due to the advantages of XML, in that it can be adapted according to the needs of various systems and users.

Messages sent and received by the system are in XML format. In cases that a supplier's enterprise system is based on EDI, the appropriate conversion is taking place (all messages submitted and received by such companies adhere to their legacy EDI format). The overall system provides any-to-any format transformation and multiple communication protocols (hypertext transfer protocol, simple mail transfer protocol, flat-file transfer, etc.). In other words, it overcomes the limitations of classical EDI and provides an enterprise with alternative ways of performing electronic transactions.

The system developed consists of three main modules (see Exhibit 5), which deal with the internal workflow management, the demand-side transactions (hold between the company and its customers) and the supply-side transactions (hold between the company and its suppliers). A brief presentation of their specifications together with some technical details of the underlying technology is given below.

The *Internal Workflow Management Module* mainly deals with the processes, and the related documents accompanying them, that are triggered by the reception of an order from a customer. It is based on clearly specified business models of the company this case reports on; however, it has been kept open and extendable to address the requirements of any other enterprise. Information related to an incoming order is embedded in the company's existing

Exhibit 5. The Proposed Supply Chain Management System

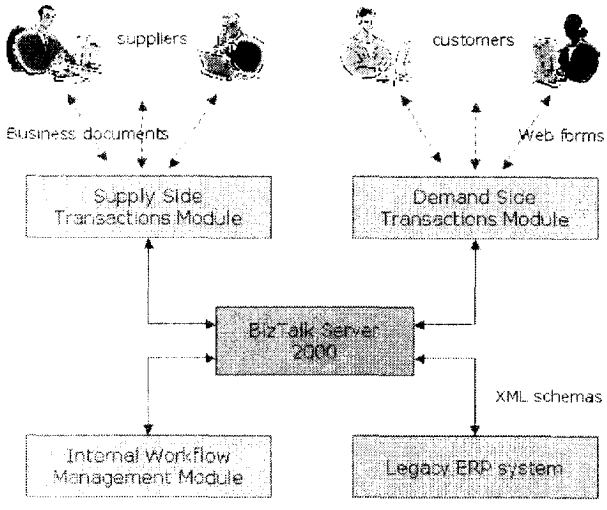

ERP system, which in the sequel issues the necessary production orders. Similarly, ERP provides the module with the input needed to monitor the route of an order throughout the company's production units. The module relies on Microsoft's BizTalk Server 2000, which has been successfully tested in various enterprise settings, and provides all tools and methodologies needed for the transformation and routing of business documents, as well as monitoring of the related processes. Exchange of documents is done in W3C-standard XML, while all document transformation can be done in W3C-standard XSLT (Extensible Stylesheet Language Transformations).

Among the tools provided are:

(i) *BizTalk Messaging Manager,* which automates the process of setting up trading profiles and agreements to exchange business documents with applications and trading partners over the Internet. This management technology is based on a graphical user interface;

(ii) *BizTalk Orchestration Designer,* which provides a visual environment to design and build dynamic distributed business processes;

(iii) *BizTalk Editor,* which easily creates and edits XML document schemas; and

(iv) *BizTalk Mapper,* which easily transforms one schema into another generating W3C-standard XSLT files for transforming documents.

The *Demand-Side Transactions Module* is a Web-based application, through which customers can put an order by filling in some specially designed forms. Moreover, the module allows customers to monitor the status of an order, view the pricing lists and offers of the company, and consider his/her personal account files. Much attention has been paid to keep the related user interface as friendly as possible. The tool is also based on XML technologies and relies on Microsoft's Commerce Server 2000 and SQL Server 2000. The tool is fully customizable to the needs of any user involved, providing easy user profiling and management, transaction processing, product and service management, and targeted marketing and merchandising.

Commerce Server 2000 offers an easy way to build tailored and effective e-commerce solutions. By providing the application framework, together with sophisticated feedback mechanisms and analytical capabilities, it allows for quick development of sites that optimize the customer experience and help establishing closer relationships among the trading partners. Its basic tools comprise:

(i) *Business Desk,* which provides the means for a centralized, web-based management of users, products and services, and marketing campaigns;

(ii) *Profile System,* which handles issues such as authentication to use a site and advanced targeting and personalization of users;

(iii) *Business Processing Pipeline System,* which helps in tailoring orders and merchandising processes to fit the users requirements, while being able to easily modify them upon business changes;

(iv) *Product Catalog System,* which is able to manage millions of products, offer custom catalogues, etc.; and

(v) a set of development and administrative tools and pre-built business components.

Finally, SQL Server 2000 is an ideal platform for launching the above set of applications. Its basic features include reliability, robustness, industry-leading performance, scalability, and appropriate management tools. In addition, it provides rich support for XML, easy Web access to database information, and powerful analysis tools, coupled with high availability and tight security.

The *Supply-Side Transactions Module* manages the electronic interchange of business documents with the suppliers, thus fully covering the supply chain of the company. In its current version, the tool is not based on the Web; instead, it offers data mediation services among the information systems (i.e., ERPs) of two enterprises. A drawback arising here is that the supplier companies should have a satisfactory level of information technology infrastructure. However, future versions are planned to be fully Web-based, in line with the demand side transactions module described above. As illustrated in Exhibit 5, integration of the three modules described above takes place through the Microsoft's Biztalk Server 2000.

Whenever customers want to interact with the enterprise, they have to fill in the appropriate Web forms and submit a message to the system. Messages sent through the Web interfaces may also be converted to any known format required. Additionally, the system is able to handle documents of any type, thus providing flexibility for future extensions. As made clear from the above, the proposed framework by no means affects the existing trading partners. There will be no change in the working methods they use, nor will they need any extra software or hardware resources. On the other side, customers will only need Internet access and a Web browser to interact with the company. The Web forms designed provide them with a user-friendly interface, thus such companies will not need much effort and investments to get fully acquainted with the proposed way of doing business.

Supply Chain Management Issues

Having previously discussed the technical aspects of the framework adopted by the company, this section comments on some supply chain management issues that have impacted the system's analysis, design and implementation. These concern the improvement of the buyer-supplier relationship, the reduction of production costs through a more efficient and up-to-date production planning, and the more efficient inventory management.

Value chain analysis describes the activities within and around an organization, and relates them to an analysis of the competitive strength of the organization or its ability to

provide "value-for-money" products or services (Porter, 1985; Shepherd, 1998). The system envisioned by the company had to facilitate the early supplier involvement, which is an accepted practice in many contemporary firms. Usually (but not always), early supplier involvement results in the selection of a simple source of supply, between carefully pre-qualified potential suppliers. While purchasing and supply management have the ultimate responsibility for selecting the "right" source, the selection process can be handled in many ways (Dobler & Burt, 1996). Using the system developed, the company could easily conduct the analysis and make the appropriate selection (Supply Side Transactions Module). After developing a comprehensive list of potential suppliers, the company's next step is to evaluate each perspective supplier individually. Through an elimination process, a list of potential suppliers is developed, which the buying company may be willing to do business with. The supplier list should be complete enough to include every type of criteria desired, such as quality, price and service. The overall system's approach takes into consideration that the evaluation required to determine supplier capability varies with the nature, criticality, complexity and money value of the purchase to be made. All of the above led to an operating situation in which the buyer-supplier relationship was closer and more cooperative than before. Literally speaking, it led to an informal partnership operation aiming at establishing a "win-win" deal.

Another big issue was the reduction of production costs. The company's objectives, concerning production planning and control functions, have always been to coordinate the use of the firm's resources and synchronize the work of all individuals concerned with production, in order to meet required completion dates, at the lowest total cost, consistent with the desired quality. From the early development phases of this project, two important production planning concepts were considered: the former concerned the multi-level nature of the operation of the production planning system, while the latter its dynamic nature (Dobler & Burt, 1996; Thomas & Griffin, 1996). The aggregate planning and the master scheduling activities were certainly top management and staff responsibilities. Activities associated with the material requirements planning and capacity requirements planning activities were primarily falling under the responsibility of production planning and control personnel. Finally, the control of production operations themselves was a joint responsibility of production planning and control personnel and supervisory operating personnel (all in the Production Division). Much attention was paid to avoid reengineering the above issues; the system developed gives restricted access to the appropriate users, maintains the traditional decision making processes, while, at the same time, provides accurate and up-to-date information to all associated parties. All company's managers had agreed that efficient coordination of information and workflows, through the foreseen system, should result in a significant reduction of production costs.

Another supply chain management issue was inventory management. As known, the basic objective of an inventory management system is to determine the most appropriate inventory levels. During the development of the system, the company considered the following inventory categories: production inventories (raw materials, parts, and components), MRO inventories (maintenance, repair and operating supplies), in-process inventories (semi-finished products) and finished goods inventories. Their concern focused on the planning and control of production and MRO inventories at various time periods (weekly, monthly and, in some cases, quarterly or even yearly decisions). Complementary to the above aspects, and in order to make more elaborated decisions about inventory management, the overall approach had to consider the behavior of the inventory-related costs (Kobert, 1992).

More specifically, two basic categories of costs were associated with inventories: inventory carrying costs (opportunity cost associated with inventory investment, insurance costs, property taxes, storage costs, obsolescence and deterioration) and inventory acquisition costs, which were not related to inventory size per se, but rather, to the number of orders placed or deliveries received during a given period of time. The system developed keeps full track of the above. Identification of correspondences and development of logical mappings (e.g., SQL views) from the associated diverse sources were the major tasks in this issue.

CURRENT CHALLENGES/PROBLEMS FACING THE ORGANIZATION

The overall framework envisioned by the IS Division manager should efficiently support interaction and cooperation between various types of partners (customers and suppliers), while the required functionality should be delivered over the Internet. There was no doubt that the need to exchange information was critical within the company's business community (Sodhi, 2001). As expected, the manager was earlier convinced that, by integrating computers and data communications into the business process, the company could benefit from exchanging information electronically, in that they reduce paperwork, minimize cost and improve response time.

Securing the approval of the company's executive board towards going ahead with the associated project development and the recognition of the need to reconsider the existing organizational structure in order to involve more parts of the business in it were the first big challenges emerging. During his meetings with the members of the executive board and the managers of all divisions involved during the implementation of the project, the IS Division manager was giving particular emphasis to the major issues listed earlier in this paper, in the section of analysis and design issues.

The system was implemented in about 15 months. For its implementation, all employees of the IS Division were involved, while two more experienced people, working at a big software house, were hired for part-time work. The system integrated a set of off-the-shelf tools, thus assuring a robust, scalable and fast development cycle. The major challenge during the implementation was to provide the company with new levels of flexibility, while helping their partners rewrite the rules of their business, and ensure the functionality needed to respond rapidly to future changes. The component-based approach followed was in line with current trends of the development of e-business enterprise systems (Fan et al., 2000).

Both during the implementation and at the completion of the project, the employees of the IS Division had to make all users involved in the system aware of what is going on and recognize the advantages and prospects of the new approach. They had to attract their interest and cooperate with them in order to result to a fine-tuning of the system. Upon completion, a two weeks training program was performed. The confirmation of the executive board members and all users involved in the system that the approach followed was the right one was certainly of highest importance. All of the above were asked to evaluate the final system through a set of carefully imposed criteria. Moreover, a set of performance indicators for supply chain management was established. Having defined such measures, one can continuously monitor the behavior of the system in order to evaluate it in detail and improve its efficiency.

The first evaluation results show that the development of the system was a success and a reward of the IS Division manager expectations. Cooperation of all parties involved during

the project's development, exploitation of their expertise and adoption of well-tried and open solutions were certainly the major factors that led to that. The system is able to serve strategic goals of the company, such as embarkation on e-business, efficient data management and integration of supply chain. Project management was also successful; no unforeseen events changed the initial development plan.

Moreover, managerial implications have been only positive until today. The serious involvement of the company's personnel (from all operational, knowledge, management and strategic level) from the early development phases gave them the opportunity to reconsider their traditional work practices. Even these that were not fully convinced about the necessity to go ahead and develop the system have only good comments to make today. System users acknowledge the appropriate synchronization of the internal and external work and data flows, improvement of supply chain management, reduction of transactions costs through the appropriate process automation, reduction of errors occurring during the handling of business documents, existence of accurate and on-line information, reduction of the company's inventory levels and, finally, establishment of a highly cooperative environment between the company and its customers and suppliers. The close cooperation of the development team with all parties involved, both during and after the project's development, eliminated any misrepresentations of what the system could deliver and in what frame.

Perfective and adaptive maintenance of the system impose problems and challenges the company has to currently address. Most of it concerns the Supply Side Transactions Module. As stated in a previous section, one problem was that the supplier companies should have a satisfactory level of information technology infrastructure. Regarding this module, the next version is planned to be fully Web-based (in line with the Demand Side Transactions Module). There is also ongoing work in improving the user interfaces of the Demand Side Transactions Module; such improvements concern the, as easy as it could get, completion of the related forms and the expansion of the services offered. Finally, much attention is being paid in both redesigning the reports currently offered and offering additional ones (to all company's division managers), the aim being to fully exploit the data now stored in the system's database and further aid decision-making processes.

FURTHER READING

Bakos, J.Y. (1991). Information links and electronic marketplaces: The role of inter-organizational information systems in vertical markets. *Journal of Management Information Systems*, 8(2), 31-52.

Leenders, M. R. & Flynn, A.E. (1995). *Value-Driven Purchasing*. Irwin Professional Publishing.

Lieb, R. (2000). *Third Party Logistics: A Manager's Guide*. Houston, TX: JKL Publications.

Maciaszek, L. (2001). *Requirements Analysis and System Design: Developing Information Systems with UML*, Harlow, UK: Addison Wesley.

Raedels, A. R. (1995). *Value-Focused Supply Management*. Irwin Professional Publishing.

Tang, J.E., Shee, D., & Tang, T. (2001). A conceptual model for interactive buyer-supplier relationship in electronic commerce. *International Journal of Information Management*, 21, 49-68.

Timmers, P. (1998). Business models for electronic markets. *Electronic Markets*, 8(2), 3-8.

Warkentin, M., Bapna, R., & Sugumaran, V. (2000). The role of mass customization in enhancing supply chain relationships in B2C e-commerce. *Journal of Electronic Commerce Research*, 1(2), 1-17.

REFERENCES

Dobler, D.W. & Burt, D. (1996). *Purchasing and Supply Management (6th ed.)*. Boston, MA: McGraw-Hill.

Fan, M., Stallaert, J., & Whinston, A.B. (2000). The adoption and design methodologies of component-based enterprise systems. *European Journal of Information Systems*, 9, 25-35.

Froehlich, G., Hoover, H.J., Liew, W., & Sorenson, P.G. (1999). Application framework issues when evolving business applications for electronic commerce. *Information Systems*, 24(6), 457-473.

Glushko, R., Tenenbaum, J., & Meltzer, B. (1999). An XML framework for agent-based e-commerce. *Communications of the ACM*, 42(3), 106-114.

Karacapilidis, N.I. (2001). On the development of an e-business oriented workflow management system. In *Proceedings of the BITWorld 2001 International Conference on Business Information Technology*, Cairo, Egypt, June 4-6.

Kobert, N. (1992). *Managing Inventory for Cost Reduction*. Englewood Cliffs, NJ: Prentice Hall.

Porter, M. (1985). *Competitive Advantage: Creating and Sustaining Superior Performance*. New York: The Free Press.

Shepherd, A. (1998) Understanding and using value chain analysis, In V. Ambrosini, G. Jonson & K. Scholes (Eds.), *Exploring Techniques of Analysis and Evaluation in Strategic Management*, Englewood Cliffs, NJ: Prentice Hall.

Sodhi, M.S. (2001). Applications and opportunities for operations research in Internet-enabled supply chains and electronic marketplaces, *Interfaces*, 31(2).

Thomas, D.J. & Griffin, P.M. (1996). Coordinated supply chain management. *European Journal of Operational Research*, 94(1), 1-15.

Webber, D. (1998). Introducing XML/EDI frameworks. *Electronic Markets*, 8(1), 38-41.

BIOGRAPHICAL SKETCH

Nikos Karacapilidis *is an associate professor at the Industrial Management Lab, Department of Mechanical Engineering and Aeronautics, University of Patras, Greece. Previously, he held research and teaching positions at the Department of Computer Science of University of Cyprus, the DI-LITH Lab of EPFL (Switzerland), the AI and Design Group of INRIA-Sophia Antipolis (France), the AI Group at GMD (Germany) and the Department of Electrical Engineering of Queen Mary and Westfield College (UK). His work is published in a variety of IS, AI and OR journals. His current research interests focus on the areas of e-Business, Advanced IS, Computer-Supported Cooperative Work, Argumentation and Negotiation Systems, and applications of the above on the Web.*